Valve Features	
Maximum working pressure	6700psig(462bar)
Working temperature	-40℃~232℃
Orifice	10mm(0.39in.)
CV	7.5

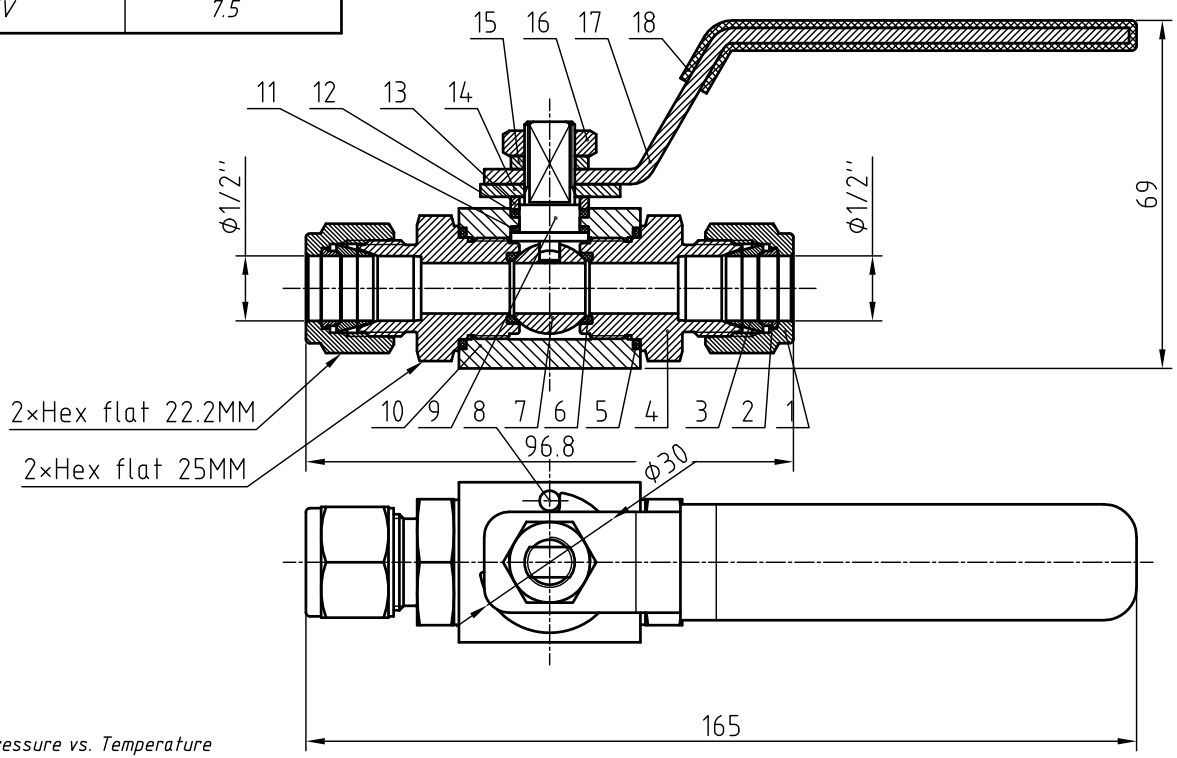

IDX	Designation	Materials
1	Nut	316L/A479
2	Rear Ferrules	316L/A479
3	Front Ferrules	316L/A479
4	End Connention	316L/A479
5	O-ring	FKM
6	Seat	PEEK
7	Ball	316L/A479
8	Stop Pin	Stainless steel
9	Stem	316L/A479
10	Body	316L/A479
11	Lower Packing	PEEK
12	Stem Packing	PTFE
13	Stem Washer	316L/A479
14	Stop Block	304/A240
15	Spring Washer	Stainless steel
16	Stem Nut	Stainless steel
17	Handle	304/A240
18	Sleeve	PVC

Pressure vs. Temperature

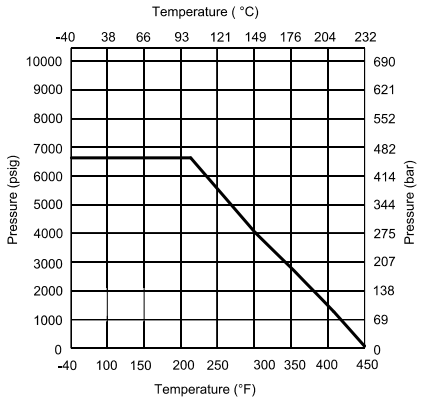

NOTE:Dimensions for reference only.

Linear unit of size: mm			Ball valve				НТА-ПРОМ ТЕХНОЛОГИИ РЕШЕНИЯ СЕРВИС
	signature	date					
design			versions	1	proportion	1:1.5	BVN4-2A-D-8T-PK-S
audit							
ratify					Page 1/1		