Valve Features	
Maximum working pressure	5400psig
Working temperature	-54℃~232℃
Orifice	10mm
CV	6.42

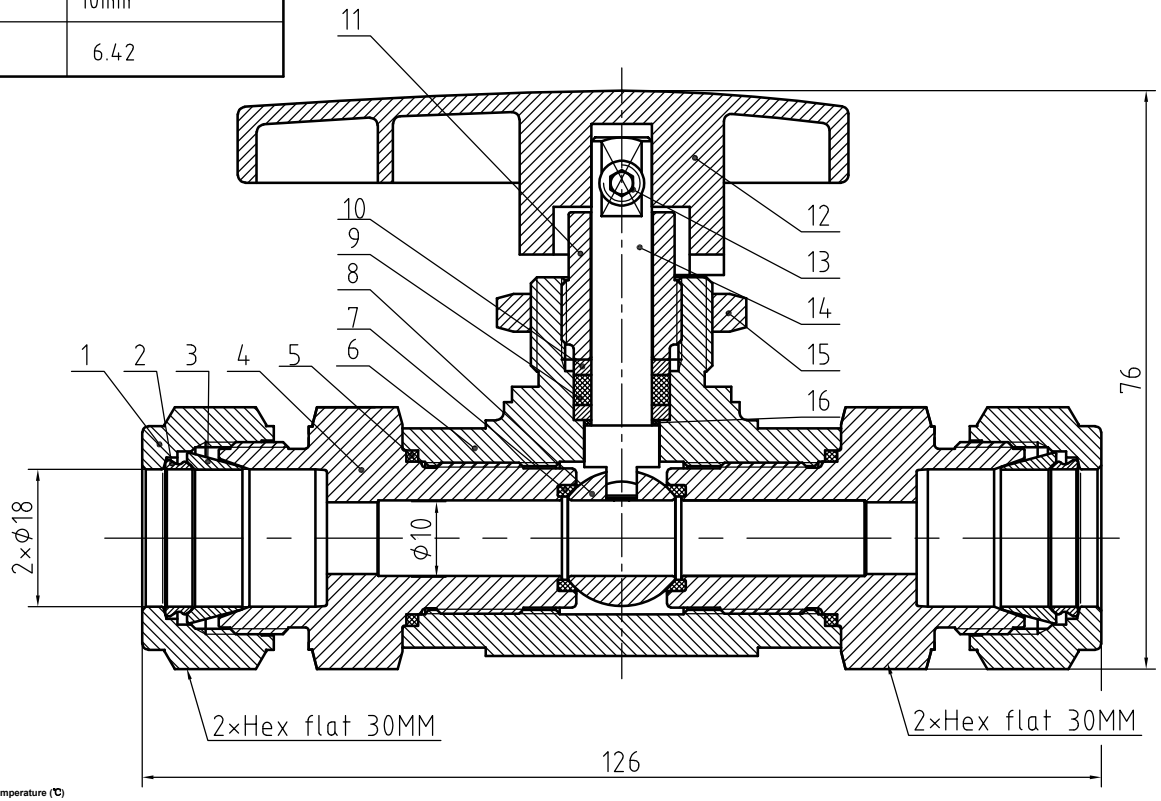

IDX	designation	materials
1	Nut	316L/A479
2	Rear Ferrules	316L/A479
3	Front Ferrules	316L/A479
4	End Connection	316L/A479
5	Connection O-ring	PTFE
6	Body	316L/A479
7	Seat	PEEK
8	Ball	316L/A479
9	Stem Packing	PTFE
10	Stem Washer	316L/A479
11	Packing Nut	316L/A479
12	Handle	Nylon
13	Set Screw	Stainless steel
14	Stem	316L/A479
15	Panel Nut	316L/A479
16	Stem Back-up Ring	PEEK

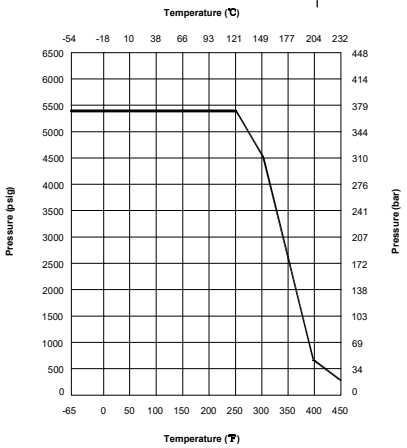

NOTE:Dimensions for reference only.

Linear unit of size: mm			Ball Valve				HTA-PROM ТЕХНОЛОГИИ РЕШЕНИЯ СЕРВИС
	signature	date					
design			versions	1	proportion	1:1	BVN9-2C-D-18M-PK-S
audit							
ratify					Page 1/1		