Valve Features	
Maximum working pressure	6000psig
Working temperature	-54℃~232℃
Orifice	10mm
CV	6.42

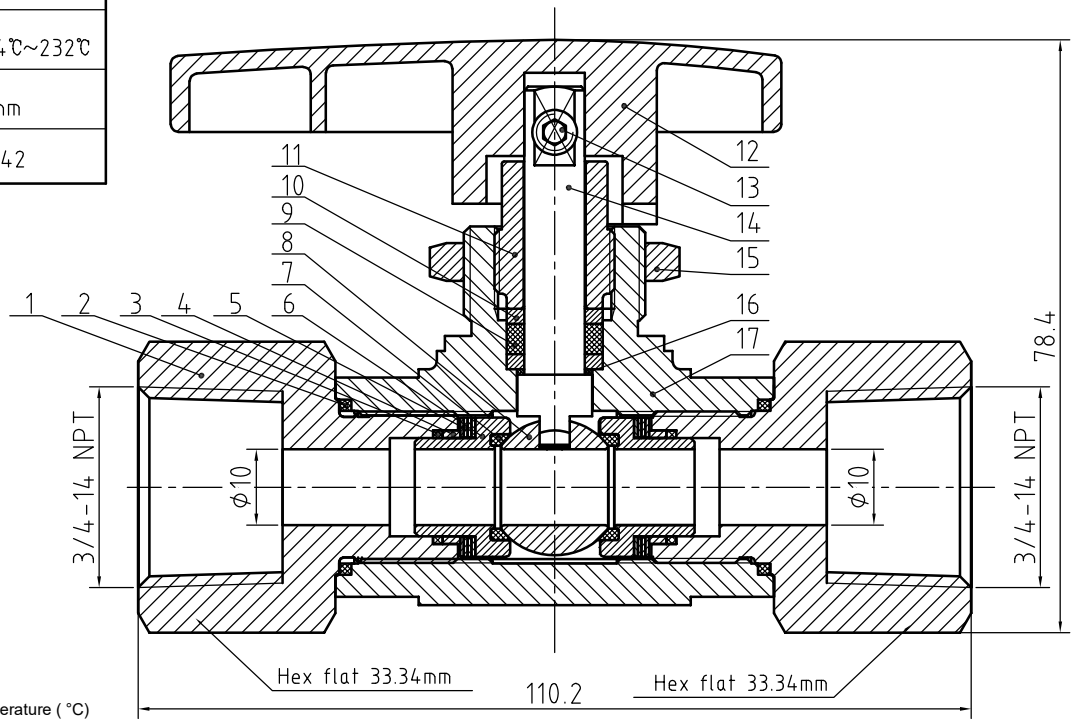

IDX	designation	materials
1	End Connection	316L/A479
2	Connection O-ring	PTFE
3	Retaining ring	PTFE
4	Seat Packing	316L/A479
5	Packing Spring	Stainless steel
6	Seat Retainer	316L/A479
7	Seat	PEEK
8	Ball	316L/A479
9	Stem Packing	PTFE
10	Stem Washer	316L/A479
11	Packing Nut	316L/A479
12	Handle	Nylon
13	Set Screw	Stainless steel
14	Stem	316L/A313
15	Panel Nut	316L/A479
16	Stem Back-up Ring	PEEK
17	Body	316L/A479

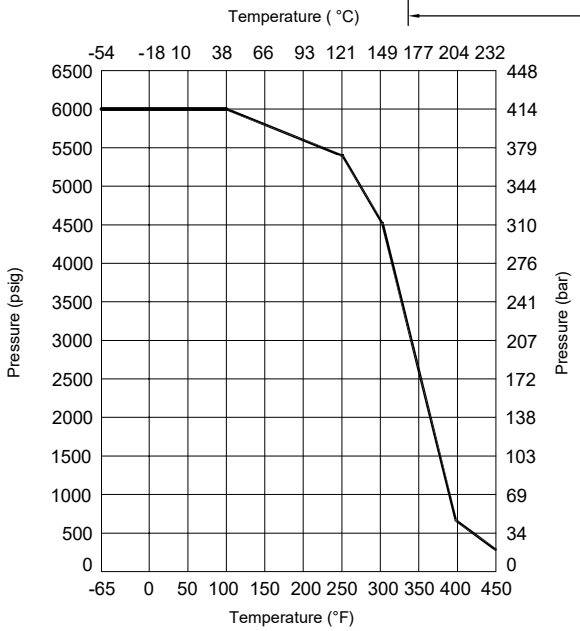

NOTE:Dimensions for reference only.

Linear unit of size: mm			Ball valve			
	signature	date				
design			versions	1	proportion	1:1
audit						
ratify					Page 1/1	