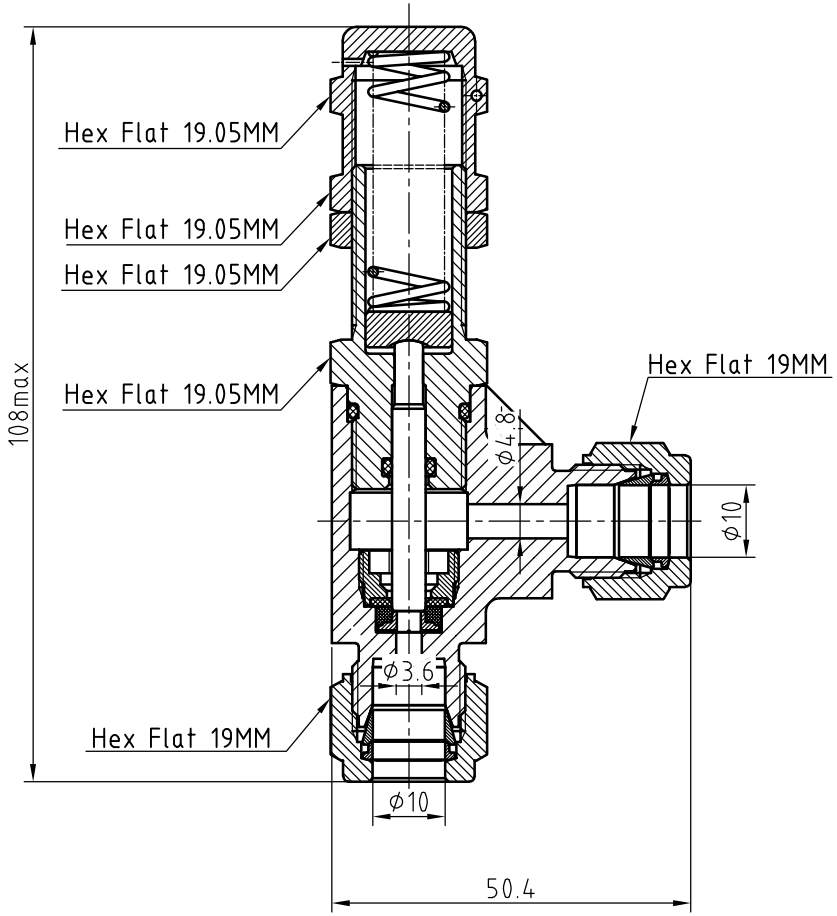

Valve Features	
Setting pressure	5000psig-6000psig
Working temperature	-23℃-148℃
Orifice	3.6MM

Linear unit of size: mm			Proportional Relief Valves				
	signature	date					
design			versions	1	proportion	1:1	
audit							
ratify					Page 1/1		